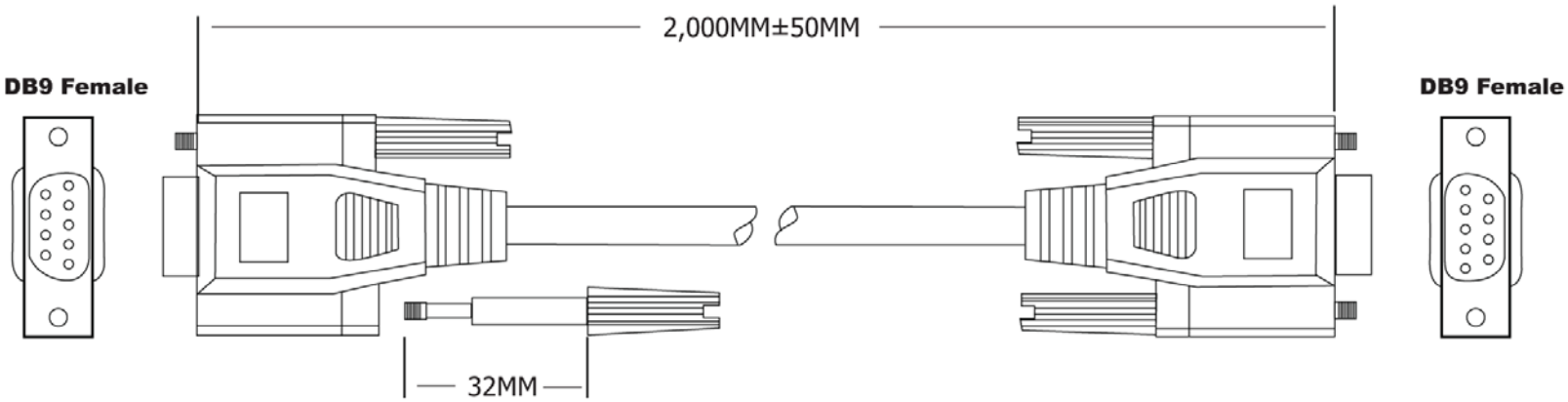

Pin Assignment

P1		P2
1	Black	1
2	Grey	2
3	Yellow	3
4	Purple	4
5	Orange	5
6	Red	6
7	Brown	7
8	Green	8
9	Blue	9
SHELL	D.W	SHELL

Material:

- Cable: 28AWG(7/0.10)*9C+D.W+AL/MY+JACKET
  - OD: 5.0MM
  - Color: Beige
- Connectors: DB 9pin Female G/F Shell
  - Nickel Solder Type
  - Insulation Color: Blue
- Thumbscrew: #4-40UNC Type, Nickel Plated
- Jacket Housing:
  - Outer Molded Beige PVC, 40P
  - Inner Molded Clear LDPE

Electrical:

- 100% Test, (Open, Short, Miss Wire)
- Contact Resistance: 2Ω Max.
- Insulation Resistance: 5MΩ Min.
- Hi-Pot: 100V DC/10ms

RoHS Complaint

Scale	1:1						Name
TOLERANCE					Drawn	11.15.11	Chappell
X.X	±0.40				Approved		
X.XX	±0.25						
X.XXX	±0.15						
Angle	±3°						
			Modification	Date	Name		

ASSMANN WSW components

Item No. **AK152-2**

Title Serial Connection Cable, D-Sub 9 Pin Female <=> D-Sub 9 Pin Female, 2 Meters

Drawing No. **rev00**

Replace | Sheet